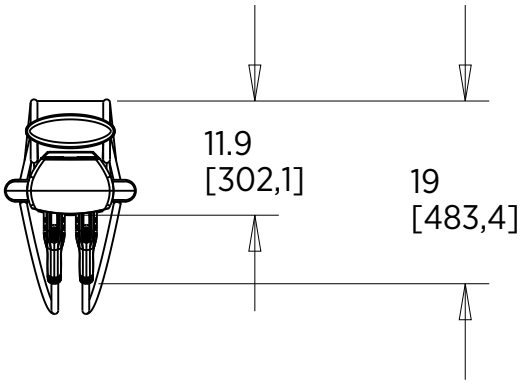
11.9
[302,1]
19
[483,4]

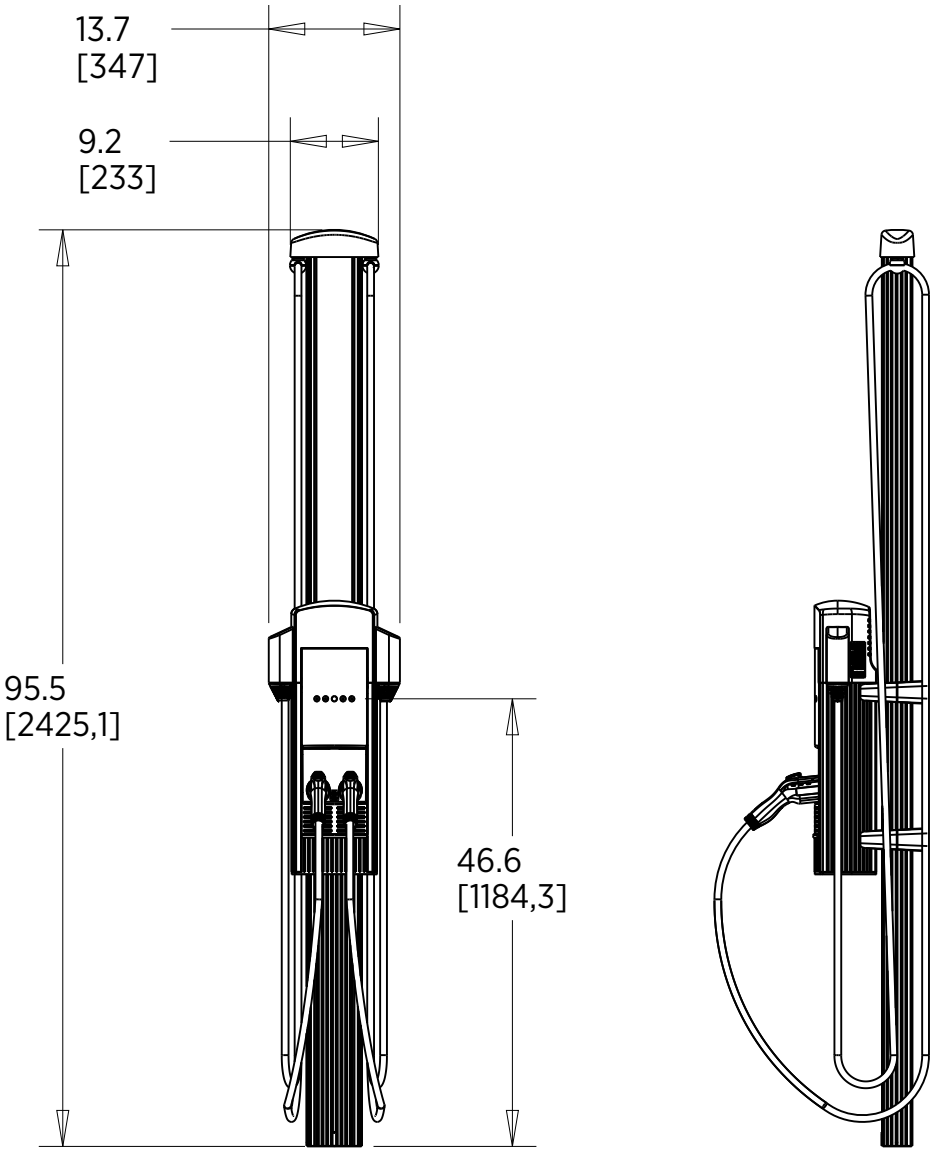
13.7
[347]
9.2
[233]
95.5
[2425,1]
46.6
[1184,3]